DEKLARACJA WŁAŚCIWOŚCI UŻYTKOWYCH

DoP: 0098

dla kotwa sworzniowa fischer FBN II HDG (Kotwy metalowe do zastosowania w betonie ze zmiennym okresem użytkowania (typ ciężki)) – **PL**

1. Niepowtarzalny kod identyfikacyjny typu wyrobu: **DoP: 0098**

2. Zamierzone zastosowanie: **Mocowanie zainstalowane dodatkowo w betonie niespękanym, zobacz dodatek, w szczególności aneksy B 1 do B 5**

3. Producent: **fischerwerke GmbH & Co. KG, Klaus-Fischer-Straße 1, 72178 Waldachtal, Niemcy**

4. Upoważniony przedstawiciel: **--**

5. System(-y) oceny i weryfikacji stałości właściwości użytkowych: **1**

6. Europejski dokument oceny: **EAD 331612-00-0601**

   Europejska ocena techniczna: **ETA-18/0101; 2018-07-16**

   Jednostka dsoceny technicznej: **ETA-Danmark A/S**

   Jednostka lub jednostki notyfikowane: **1343 – MPA Darmstadt**

7. Deklarowane właściwości użytkowe:

Wytrzymałość mechaniczna i stabilność osadzenia (BWR 1), Bezpieczeństwo użytkowania (BWR 4)

- **Istotne właściwości wyrobu: Zobacz dodatek, w szczególności aneksy C 1 do C 2**

Ochrona przeciwpożarowa (BWR 2)

- **Istotne właściwości wyrobu: NPD (Właściwości użytkowe nieustalone)**

Higiena, zdrowie i środowisko (BWR 3)

- **Treść, emisja i / lub uwalnianie substancji niebezpiecznych: EAD nie zapewnia kryteriów oceny, dlatego nie jest możliwa ocena.**

Zrównoważone wykorzystanie zasobów naturalnych (BWR 7)

- **Istotne właściwości wyrobu: EAD nie zapewnia kryteriów oceny, dlatego nie jest możliwa ocena.**

8. Odpowiednia dokumentacja techniczna lub specjalna dokumentacja techniczna: ---

Właściwości użytkowe określonego powyżej wyrobu są zgodne z zestawem deklarowanych właściwości użytkowych. Niniejsza deklaracja właściwości użytkowych wydana zostaje zgodnie z rozporządzeniem (UE) nr 305/2011 na wyłączną odpowiedzialność producenta określonego powyżej.

W imieniu producenta podpisał(-a):

Andreas Bucher, Dipl.-Ing.

i.V. A. Bucher

Wolfgang Hengesbach, Dipl.-Ing., Dipl.-Wirtsch.-Ing.

i.V. W. Hengesbach

Tumlingen, 2018-07-23

- Niniejsza Deklaracja Właściwości Użytkowych została przygotowana w różnych językach. W razie wątpliwości w interpretacji, wersja angielska jest zawsze miarodajna.
- Dodatek zawierający dobrowolne i uzupełniające informacje w języku angielskim, (neutralne językowo) a wykraczające poza wymagania prawne.

II SPECIFIC PART OF THE EUROPEAN TECHNICAL ASSESSMENT

1 Technical description of product and intended use

Technical description of the product
The fischer Bolt anchor FBN II HDG is an anchor made of zinc plated, hot-dip galvanised steel which is placed into a drilled hole and anchored by torque controlled expansion. The thickness of the corrosion protection layer is minimum 40 µm with a batch average of minimum 50 µm

Product and product description is given in Annex A.

The characteristic material values, dimensions and tolerances of the anchors not indicated in Annexes shall correspond to the respective values laid down in the technical documentation of this European Technical Assessment.

The anchors are intended to be used with embedment depth given in Annex B, Table B1. The intended use specifications of the product are detailed in the Annex B1.

2 Specification of the intended use in accordance with the applicable EAD

The performances given in Section 3 are only valid if the anchor is used in compliance with the specifications and conditions given in Annex B.

The provisions made in this European Technical Assessment are based on an assumed intended working life of the anchor as given in annex B depending on the corrosion protection.

The indications given on the working life cannot be interpreted as a guarantee given by the producer or Assessment Body, but are to be regarded only as a means for choosing the right products in relation to the expected economically reasonable working life of the works.

3 Performance of the product and references to the methods used for its assessment

3.1 Characteristics of product

Mechanical resistance and stability (BWR 1):
The essential characteristics are detailed in the Annex from C1 to C2.

Safety in case of fire (BWR 2):
No Performance assessed.

Hygiene, health and the environment (BWR3):
Regarding the dangerous substances contained in this European Technical Assessment, there may be other requirements applicable to the products falling within its scope (e.g. transposed European legislation and national laws, regulations and administrative provisions). In order to meet the provisions of the Construction Products Regulation, these requirements need also to be complied with, when and where they apply.

Safety in use (BWR4):
For basic requirement Safety in use the same criteria are valid for Basic Requirement Mechanical resistance and stability (BWR1).

Sustainable use of natural resources (BWR7)
No performance determined

Other Basic Requirements are not relevant.

3.2 Methods of assessment

The assessment of fitness of the anchor for the intended use in relation to the requirements for mechanical resistance and stability and safety in use in the sense of the Basic Works Requirements 1 and 4 has been made in accordance with EAD 330232-00-0601; Mechanical fasteners for use in concrete and EAD 331612-00-0601 Torque controlled mechanical wedge anchor with variable working life.

4 Assessment and verification of constancy of performance (AVCP)

4.1 AVCP system

According to the decision 1996/582/EC of the European Commission, the system(s) of assessment and verification of constancy of performance (see Annex V to Regulation (EU) No 305/2011) is 1.

Cone bolt manufactured by cold - forming:

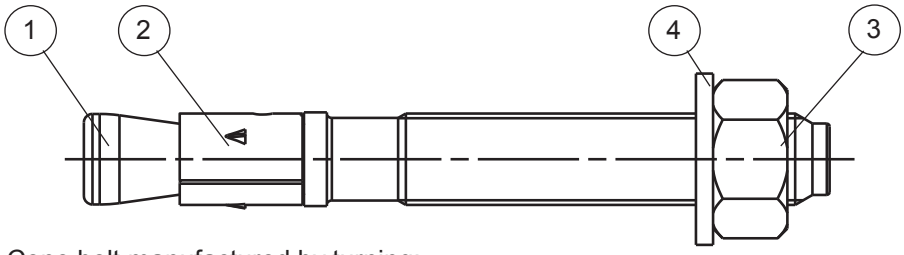

Cone bolt manufactured by turning:

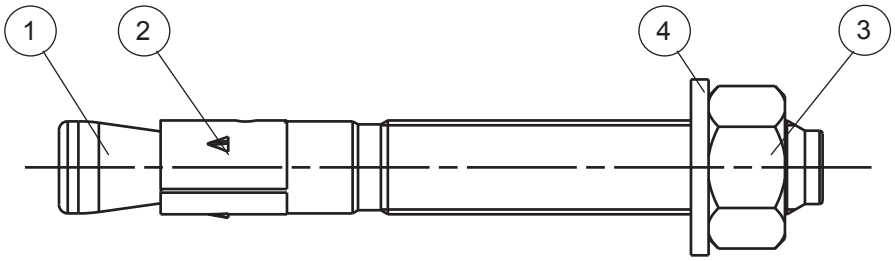

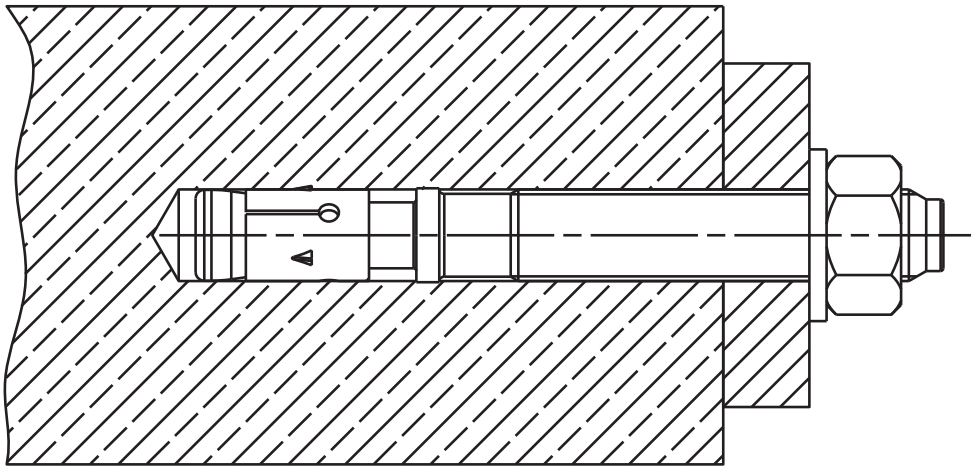

① Cone bolt (cold – formed or turned)
② Expansion sleeve
③ Hexagon nut
④ Washer

(Fig. not to scale)

fischer Bolt Anchor hot-dip galvanised FBN II HDG	**Annex A1**
Product description Installed condition	of European Technical Assessment ETA-18/0101

FBN II HDG for use with standard and reduced embedment depth ($h_{ef,\,sta}$ and $h_{ef,\,red}$)

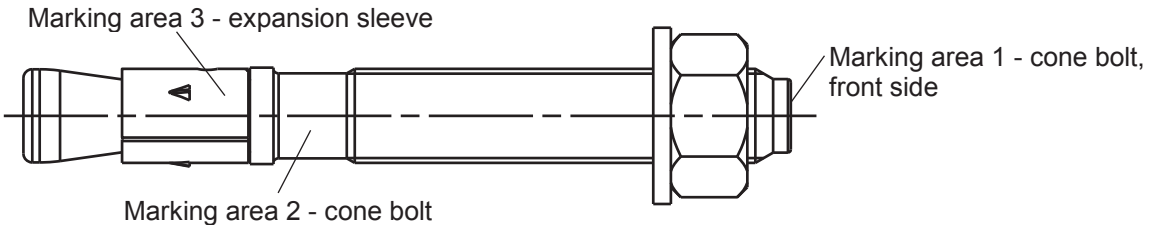

Product label, example: FBN II 12/10 HDG

Brand | type of fastener placed at marking area 2 or marking area 3

Thread Size / max. thickness of fixture (t_{fix}) for $h_{ef,\,sta}$ placed at marking area 2

Table A2.1: Letter-code on marking area 1 and maximum thickness of fixture t_{fix}:

Marking		A	B	C	D	E	F	G	H	I	K	L	M	N	O	P	R	S	T	U	V	W	X	Y	Z
Max.t_{fix} for $h_{ef,\,sta}$	M8-M20	5	10	15	20	25	30	35	40	45	50	60	70	80	90	100	120	140	160	180	200	250	300	350	400
Max.t_{fix} for $h_{ef,\,red}$	M8, M10	15	20	25	30	35	40	45	50	55	60	70	80	90	100	110	130	150	170	190	210	260	310	360	410
	M12, M16	20	25	30	35	40	45	50	55	60	65	75	85	95	105	115	135	155	175	195	215	265	315	365	415
	M20	30	35	40	45	50	55	60	65	70	75	85	95	105	115	125	145	165	185	205	225	275	325	375	425

FBN II K HDG for use with reduced embedment depth only ($h_{ef,\,red}$):

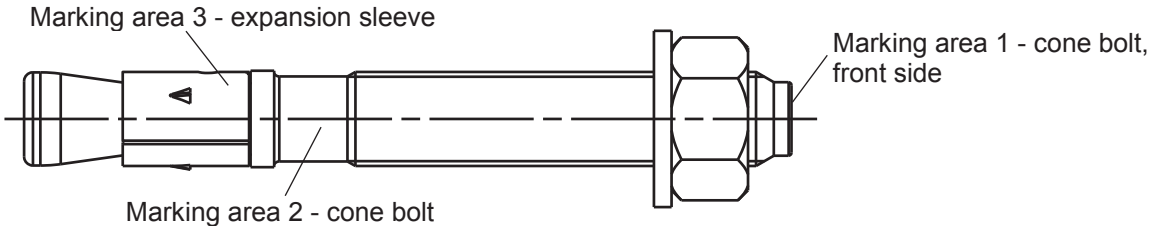

Product label, example: FBN II 12/10 K HDG

Brand | type of fastener placed at marking area 2 or marking area 3

Thread Size / max. thickness of fixture (t_{fix}) identification K for $h_{ef,red}$ placed at marking area 2

Table A2.2: Letter-code on marking area 1 and maximum thickness of fixture t_{fix}:

Marking		-A-	-B-	-C-	-D-	-E-	-F-	-G-	-H-	-I-	-K-	-L-	-M-	-N-	-O-	-P-	-R-	-S-	-T-	-U-	-V-	-W-	-X-	-Y-	-Z-
Max. t_{fix} for $h_{ef,\,red}$	M8-M20	5	10	15	20	25	30	35	40	45	50	60	70	80	90	100	120	140	160	180	200	250	300	350	400

(Fig. not to scale)

fischer Bolt Anchor hot-dip galvanised FBN II HDG	**Annex A2** of European Technical Assessment ETA-18/0101
Product description Anchor types	

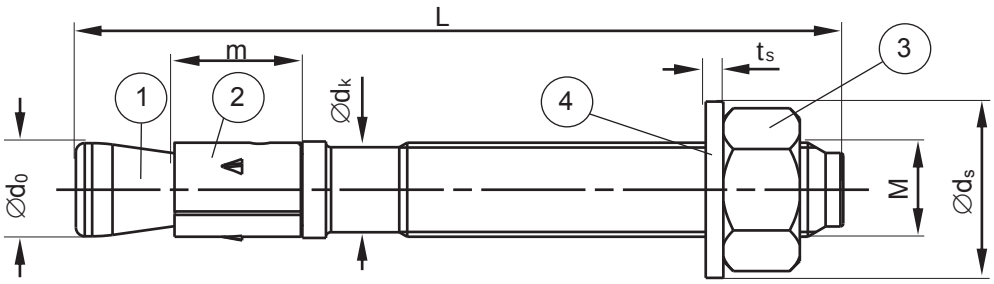

Table A3.1: Anchor dimensions [mm]

Part	Designation			M8	M10	M12	M16	M20
1	Cone bolt	$\varnothing$ d_0		7,9	9,9	11,9	15,9	19,6
		$\varnothing$ d_k		7,1	8,9	10,8	14,5	18,2
		L_{min}	≥	56	71	86	120	139
		L_{max}	≤	261	316	396	520	654
2	Expansion sleeve	m		11,5	13,5	16,5	21,5	33,5
3	Hexagon nut	Wrench Size		13	17	19	24	30
4	Washer	t_S	≥	1,4	1,8	2,3	2,7	2,7
		$\varnothing$ d_s	≥	15	19	23	29	36

Table A3.2: Materials

Part	Designation	Material
1	Cone bolt	Cold form steel or free cutting steel [1)]
2	Expansion sleeve	Stainless steel acc. to EN 10088
3	Hexagon nut	Steel, property class 8 [1)]
4	Washer	Cold strip[1) 2)]

[1)] Hot-dip galvanised ≥ 50 µm, according to EN ISO 10684: 2011
[2)] Alternative mechanical plated ≥ 53 µm, according to EN ISO 12683: 2005

(Fig. not to scale)

fischer Bolt Anchor hot-dip galvanised FBN II HDG	**Annex A3**
Product description Anchor dimensions Materials	of European Technical Assessment ETA-18/0101

Specifications of intended use

fischer Bolt Anchor hot-dip galvanised FBN II HDG	M8	M10	M12	M16	M20
Static and quasi-static loads			✓		
Standard embedment depth			✓		
Reduced embedment depth			✓		
Uncracked concrete			✓		

Base materials:
- Normal weight concrete (uncracked) according to EN 206-1: 2000
- Strength classes C20/25 to C50/60 according to EN 206-1: 2000

Use conditions (Environmental conditions):
- Structures subject to dry internal conditions and to external atmospheric Classification of atmospheric corrosivity, determination and estimation C1 – CX according to EAD 331612-00-0601

Design:
- Anchorages are to be designed under the responsibility of an engineer experienced in anchorages and concrete work
- Verifiable calculation notes and drawings are to be prepared taking account of the loads to be anchored. The position of the anchor is indicated on the design drawings (e.g. position of the anchor relative to reinforcement or to supports, etc.)
- Design of fastenings according to FprEN 1992-4: 2016 and EOTA Technical Report TR 055

Installation:
- Anchor installation carried out by appropriately qualified personnel and under the supervision of the person responsible for technical matters of the site
- Hammer or hollow drilling according to Annex B5

Durability:
- Variable working life according to EAD 331612-00-0601

Table B1.1: Durability of hot dip galvanised **coatings** according to EN ISO 10684: 2011-09 for coatings with mean thickness of minimum 50 µm

Corrosivity category	Corrosivity	Durability
		Thickness according to EN ISO 10684: 2011 chapter 8.3 ≥ 50µm in average Durability [years]
C1	Very low	50[1)]
C2	Low	50[1)]
C3	Medium	25
C4	High	12,5
C5	Very high	5
CX	Extreme	2

[1)] Durability of coating thickness. Working life of fastener according to EAD 330232-00-0601 section 1.2.2 (limited to 50 years

Table B2.1 Description of typical atmospheric environments **indoor** related to the estimation of corrosivity categories according to ISO 9223-2012-02 Table C.1 and the corresponding durability categories according to EAD-330232-00-0601 chapter 2.2.12 a (1) – (3)

Corrosivity category	Corrosivity	Typical environments – Examples	
		Indoor	EAD-330232 chapter 2.2.12 a
C1	Very low	Heated spaces with low relative humidity and insignificant pollution, e.g. offices, schools, museums	(1)
C2	Low	Unheated spaces with varying temperature and relative humidity. Low frequency of condensation and low pollution, e.g. storage, sport halls	(1)
C3	Medium	Spaces with moderate frequency of condensation and moderate pollution from production process, e.g. food-processing plants, laundries, breweries, dairies	(2)
C4	High	Spaces with high frequency of condensation and high pollution from production process, e.g. industrial processing plants, swimming pools	(2)
C5	Very high	Spaces with very high frequency of condensation and/or high pollution from production process, e.g. mines, caverns for industrial purposes, unventilated sheds in subtropical and tropical zones	(3)
CX	Extreme	Spaces with almost permanent condensation or extensive periods of exposure to extreme humidity effects and/or high pollution from production process, e.g. unventilated sheds in humid tropical zones with penetration of outdoor pollution including airborne chlorides and corrosion-stimulating particulate matter	(3)

Table B3.1 Description of typical atmospheric environments **outdoor** related to the estimation of corrosivity categories according to ISO9223-2012-02 Table C.1 and the corresponding durability categories according to EAD-330232-00-0601 chapter 2.2.12 a (1) – (3)

Corrosivity category	Corrosivity	Typical environments – Examples	
		Outdoor	EAD-330232 chapter 2.2.12 a
C1	Very low	Dry or cold zone, atmospheric environment with very low pollution and time of wetness, e.g. certain deserts, Central Arctic/Antarctica	(2)
C2	Low	Temperate zone, atmospheric environment with low pollution (SO_2 < 5 µg/m^3), e.g. rural areas, small towns Dry or cold zone, atmospheric environment with short time of wetness, e.g. deserts, subarctic areas	(2)
C3	Medium	Temperate zone, atmospheric environment with medium pollution (SO_2: 5 µg/m^3 to 30 µg/m^3) or some effect of chlorides, e.g. urban areas, coastal areas with low deposition of chlorides Subtropical and tropical zone, atmosphere with low pollution	(2)
C4	High	Temperate zone, atmospheric environment with high pollution (SO_2: 30 µg/m^3 to 90 µg/m^3) or substantial effect of chlorides, e.g. polluted urban areas, industrial areas, coastal areas without spray of salt water or, exposure to strong effect of de-icing salts Subtropical and tropical zone, atmosphere with medium pollution	(2)
C5	Very high	Temperate and subtropical zone, atmospheric environment with very high pollution (SO_2: 90 µg/m^3 to 250 µg/m^3) and/or significant effect of chlorides, e.g. industrial areas, coastal areas, sheltered positions on coastline	(3)
CX	Extreme	Subtropical and tropical zone (very high time of wetness), atmospheric environment with very high SO_2 pollution (higher than 250 µg/m^3) including accompanying and production factors and/or strong effect of chlorides, e.g. extreme industrial areas, coastal and offshore areas, occasional contact with salt spray	(3)

Table B5.1: Installation parameters

Size				M8	M10	M12	M16	M20
Nominal drill hole diameter	d_0		[mm]	8	10	12	16	20
Maximum diameter of drill bit	d_{cut}	≤		8,45	10,45	12,5	16,5	20,55
Effective embedment depth	h_{ef}	≥		40 (30[1) 2)])	50 (40[1)])	65 (50[1)])	80 (65[1)])	105 (80[1)])
Depth of drill hole to deepest point	h_1	≥		56 (46[1) 2)])	68 (58[1)])	85 (70[1)])	104 (89[1)])	135 (110[1)])
Diameter of clearance hole in the fixture	d_f	≤		9	12	14	18	22
Required setting torque	T_{inst}		[Nm]	15	30	40	70	200

[1)] Only for reduced embedment depth
[2)] Use restricted to anchoring of structural components which are statically indeterminate

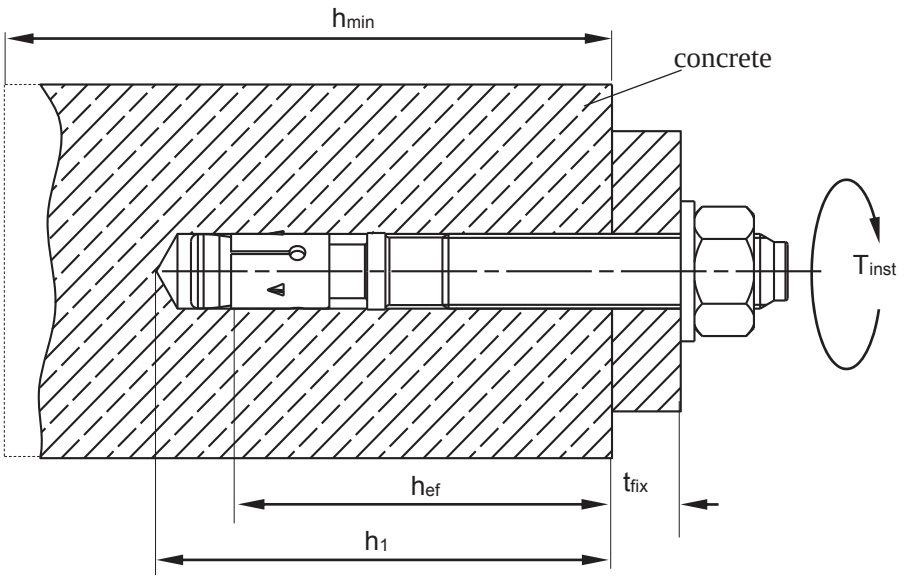

h_{ef} = Effective embedment depth
t_{fix} = Thickness of fixture
h_1 = Depth of drill hole to deepest point
h_{min} = Minimum thickness of concrete member
T_{inst} = Required setting torque

(Fig. not to scale)

fischer Bolt Anchor hot-dip galvanised FBN II HDG	**Annex B4** of European Technical Assessment ETA-18/0101
Intended use Installation parameters	

Table B6.1: Minimum thickness of concrete members, minimum spacing and minimum edge distance

Size				M8	M10	M12	M16	M20
Standard embedment depth	Effective embedment depth	$h_{ef,\,sta}$	[mm]	40	50	65	80	105
	Minimum thickness of member	h_{min}		100	100	120	160	200
	Minimum spacing	s_{min}		40	50	70	90	120
	Minimum edge distance	c_{min}		40	50	70	90	120
Reduced embedment depth	Effective embedment depth	$h_{ef,\,red}$	[mm]	30[1)]	40	50	65	80
	Minimum thickness of member	h_{min}		100	100	100	120	160
	Minimum spacing	s_{min}		40	50	70	90	120
	Minimum edge distance	c_{min}		40	80	100	120	120

[1)] Use restricted to anchoring of structural components which are statically indeterminate

Installation instructions

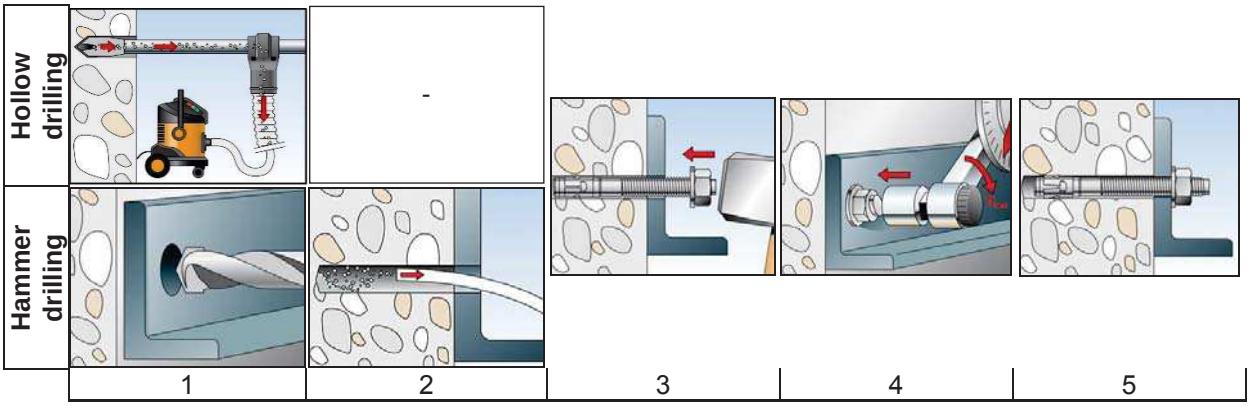

No.	Description	
1	Create drill hole with hammer drill	Create drill hole with hollow drill and vacuum cleaner
2	Clean bore hole	-
3	Set anchor	
4	Expand anchor with prescribed installation torque T_{inst}	
5	Finished installation	

Types of drills	
Hammer drill	
Hollow drill	

(Fig. not to scale)

fischer Bolt Anchor hot-dip galvanised FBN II HDG	**Annex B5**
Intended use Minimum thickness of member, minimum spacing and edge distance Installation instructions	of European Technical Assessment ETA-18/0101

Table C1.1: Characteristic values of **tension** resistance for **standard and reduced embedment depth** under static and quasi-static loads

Size			M8	M10	M12	M16	M20
Steel failure for standard and reduced embedment depth							
Characteristic resistance	$N_{Rk,s}$	[kN]	16,5	27,2	41,6	77,9	107
Partial safety factor	γ_{Ms}	[-]	1,4	1,4	1,4	1,5	1,5
Pullout failure for standard embedment depth							
Characteristic resistance C20/25	$N_{Rk,p}$	[kN]	- [1)]				
Pullout failure for reduced embedment depth							
Characteristic resistance C20/25	$N_{Rk,p}$	[kN]	6[2)]	- [1)]			
Increasing factors for $N_{Rk,p}$	ψ_c	C25/30	1,12				
		C30/37	1,23				
		C35/45	1,32				
		C40/50	1,41				
		C45/55	1,50				
		C50/60	1,58				
Installation safety factor	γ_{inst}	[-]	1,0				
Concrete cone and splitting failure for standard and reduced embedment depth							
Effective embedment depth	$h_{ef,\,sta}$	[mm]	40	50	65	80	105
	$h_{ef,\,red}$	[mm]	30[2)]	40	50	65	80
Factor k_1 for uncracked concrete	$k_{ucr,N}$	[-]	11,0				
Spacing	$s_{cr,N}$	[mm]	3 h_{ef}				
Edge distance	$c_{cr,N}$	[mm]	1,5 h_{ef}				
Spacing (splitting failure)	$s_{cr,sp}$	[mm]	190	200	290	350	370
Edge distance (splitting failure)	$c_{cr,sp}$	[mm]	95	100	145	175	185

[1)] Pullout failure is not relevant
[2)] Use restricted to anchoring of structural components which are statically indeterminate

Table C2.1: Characteristic values of **shear** resistance for **standard and reduced embedment depth** under static and quasi-static loads

Size			M8	M10	M12	M16	M20
Steel failure without lever arm for standard and reduced embedment depth							
Characteristic resistance	$V_{Rk,s}$	[kN]	13,3	21,0	31,3	55,1	67
Steel failure with lever arm for standard embedment depth							
Characteristic bending moment	$M^0_{Rk,s}$	[Nm]	26,2	52,3	91,6	232,2	422
Steel failure with lever arm for reduced embedment depth							
Characteristic bending moment	$M^0_{Rk,s}$	[Nm]	19,9[1)]	45,9	90,0	226,9	349
Concrete pryout failure for standard and reduced embedment depth							
Factor for pryout	k_8	[-]	1,8	2,1	2,3	2,3	2,3
Installation safety factor	γ_{inst}	[-]	1,0				
Concrete edge failure for standard and reduced embedment depth							
Effective length of anchor	$l_{f,sta}$	[mm]	40	50	65	80	105
	$l_{f,red}$	[mm]	30[1)]	40	50	65	80
Effective diameter of anchor	d_{nom}	[mm]	8	10	12	16	20
Installation safety factor	γ_{inst}	[-]	1,0				

[1)] Use restricted to anchoring of structural components which are statically indeterminate

Table C2.2: Displacements due to tension loads

Size			M8	M10	M12	M16	M20
Standard embedment depth	$h_{ef,\,sta}$	[mm]	40	50	65	80	105
Tension load C20/25	N	[kN]	6,1	8,5	12,6	17,2	25,8
Displacements	δ_{N0}	[mm]	0,6	0,9	1,5	1,8	1,8
	$\delta_{N\infty}$	[mm]	3,1				
Reduced embedment depth	$h_{ef,\,red}$	[mm]	30	40	50	65	80
Tension load C20/25	N	[kN]	2,8	6,1	8,5	12,6	17,2
Displacements	δ_{N0}	[mm]	0,4	0,7	0,7	0,9	1,0
	$\delta_{N\infty}$	[mm]	1,6				

Table C2.3: Displacements due to shear loads

Size			M8	M10	M12	M16	M20
Shear load	V	[kN]	7,6	12,0	17,9	31,5	38,2
Displacements	δ_{V0}	[mm]	1,5	1,6	2,0	3,0	2,6
	$\delta_{V\infty}$	[mm]	2,3	2,4	3,0	4,5	3,9